S&S MANUFACTURING
115 Fieldcrest Ave
Edison, NJ 08837
Tel. (732) 698-2400
Fax. (732) 662-5046
www.balconyrails.com

RAIL MOUNTING TYPE

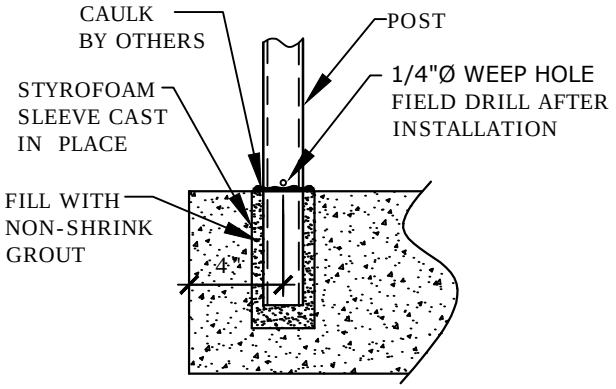

CAST IN SLEEVE MOUNTING IN CONCRETE

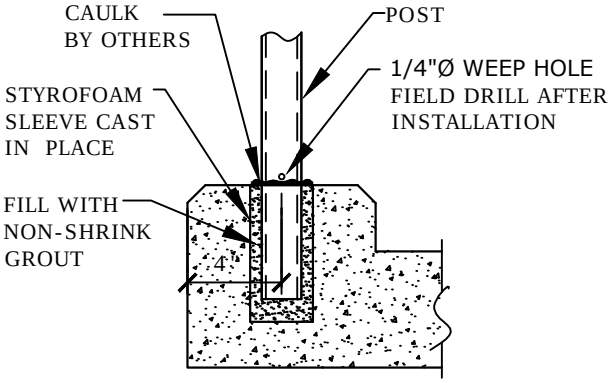

CAST IN SLEEVE MOUNTING IN CONCRETE CURB

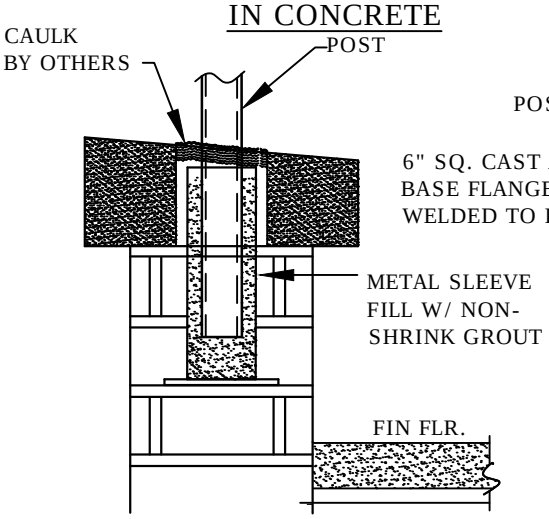

BUILT-IN SLEEVE MOUNTING IN MASONRY

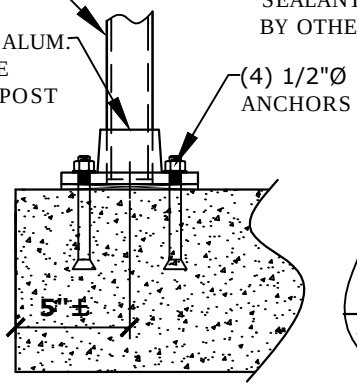

TOP MOUNTING

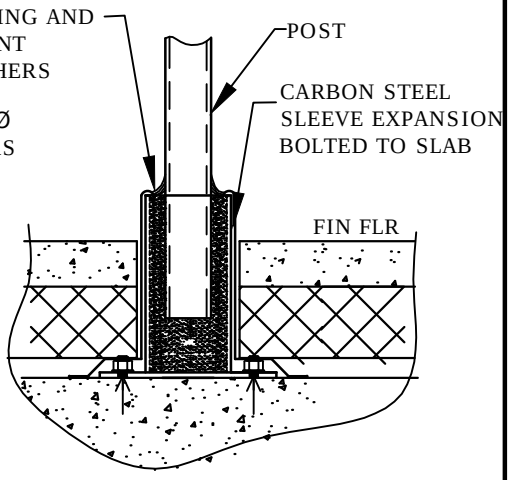

BOLT DOWN SLEEVE MOUNTING

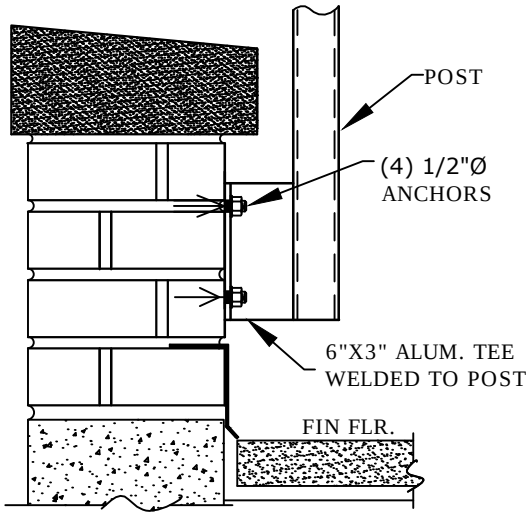

SIDE MOUNTING
(WITH ALUM.WELDED TEE)

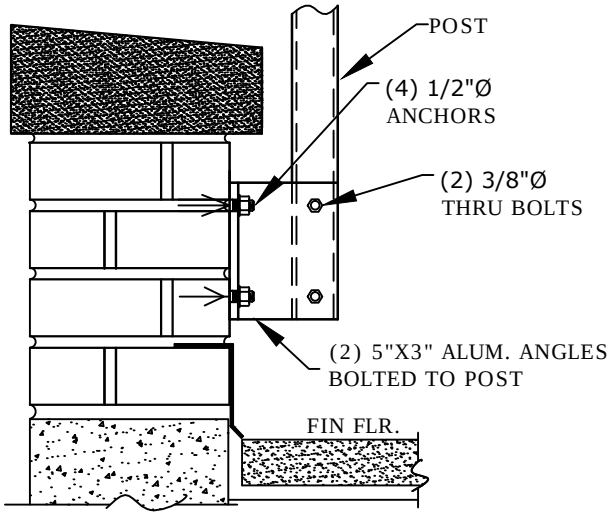

SIDE MOUNTING
(WITH ALUM. BOLTED ANGLES)